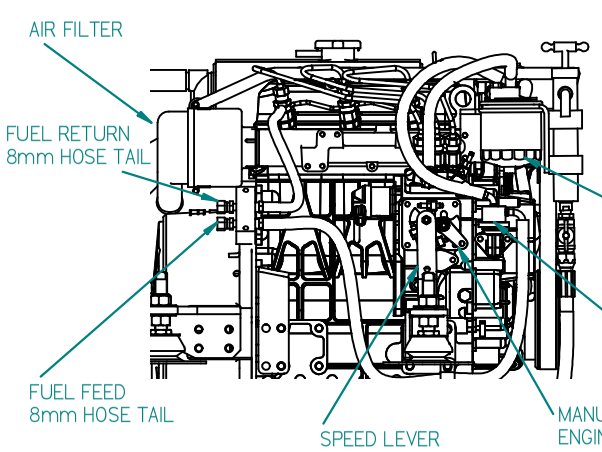

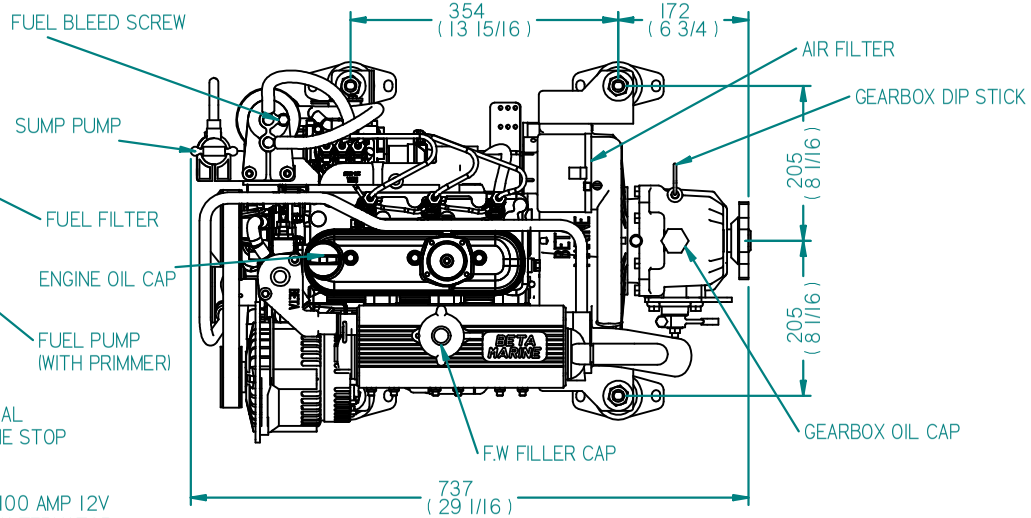

FLEXIBLE MOUNT DETAILS

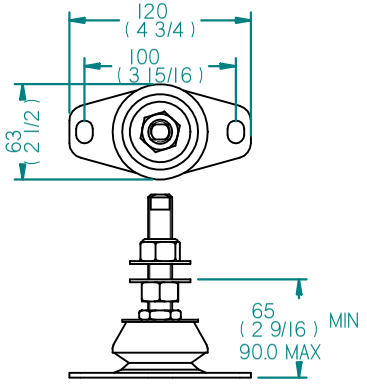

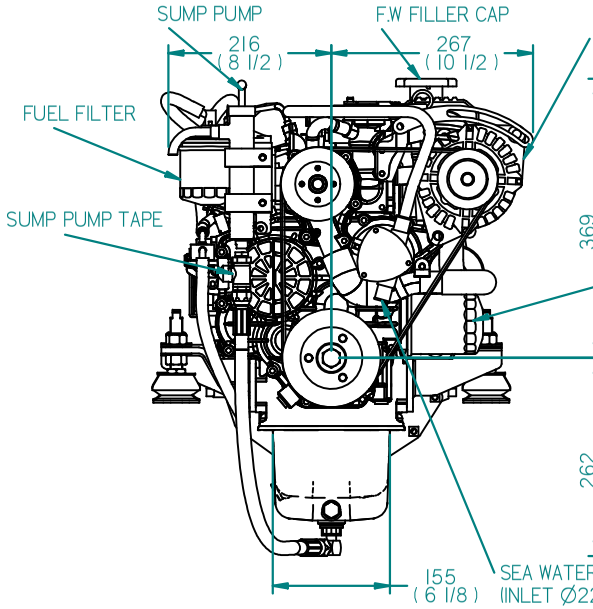

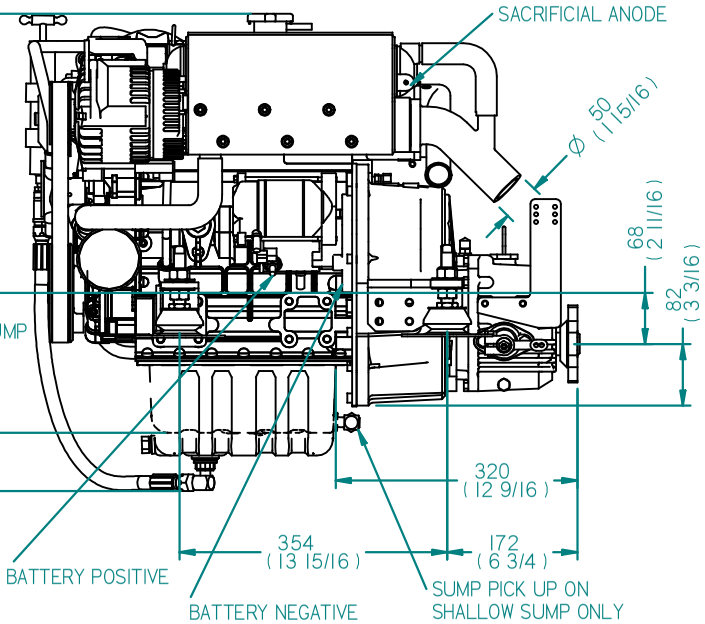

FLEXIBLE COULPING DETAILS

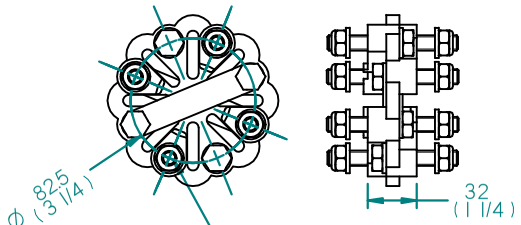

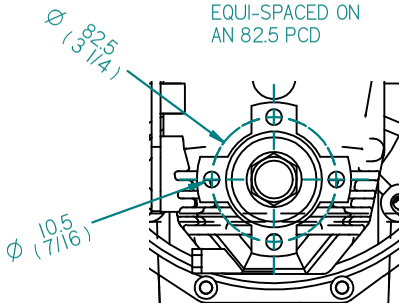

GEARBOX OUTPUT

REV	DESCRIPTION	DATE	APP'D	DRAWN
01				

NOTES

TITLE:

BETA28 & BETA30 HEAT EXCAHNGE TMC40 WITH 100AMP ALT

DIMENSIONS IN MM (INCH)
DO NOT SCALE

PART FILE NAME: 100-05767 BETA28 (BD1005) HE TMC40 100AMP ALT.asm

BETA MARINE

TEL: (01452) 723492 FAX: (01452) 729916

BETA MARINE LTD,
DAVY WAY,
WATERWELLS,
QUEDGELEY,
GLOUCESTER. GL2 2AD, UK

DRAWN BY:	SIZE	DWG NO:	REV
TW	A4	100-05767	02
CHECKED BY: LT	SCALE NTS	PAGE 1 of 1	DATE 10/09/2009