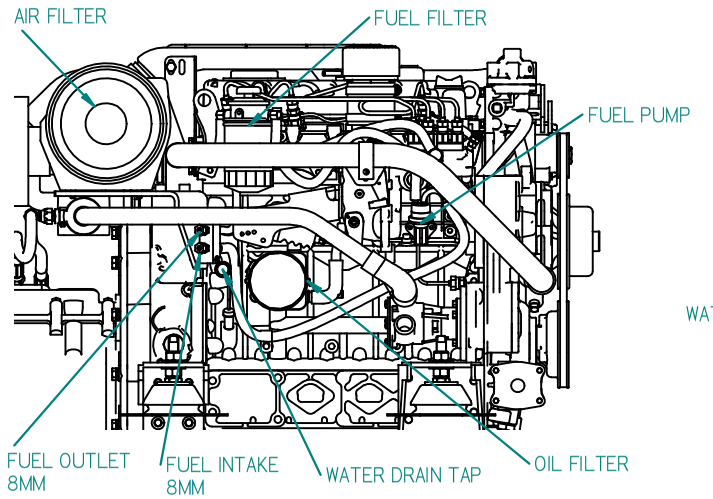

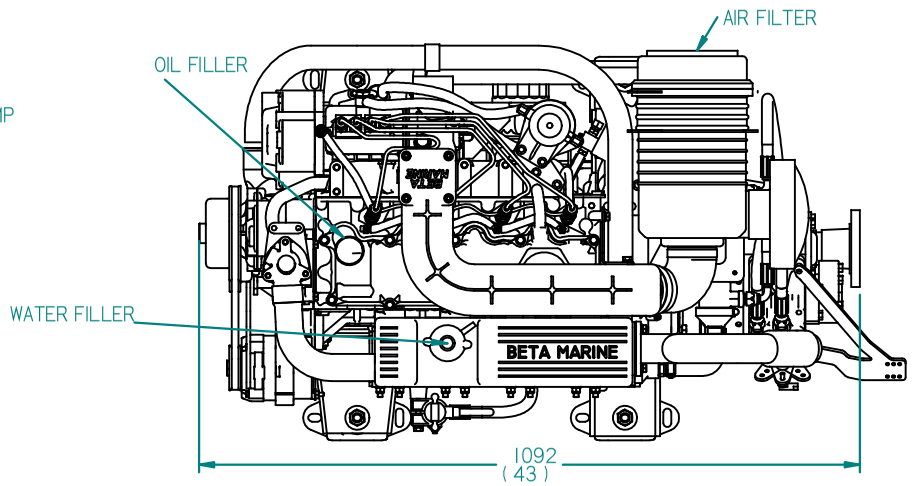

FLEXIBLE MOUNT

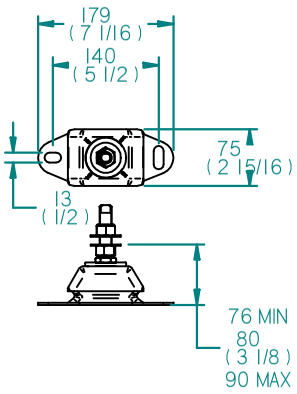

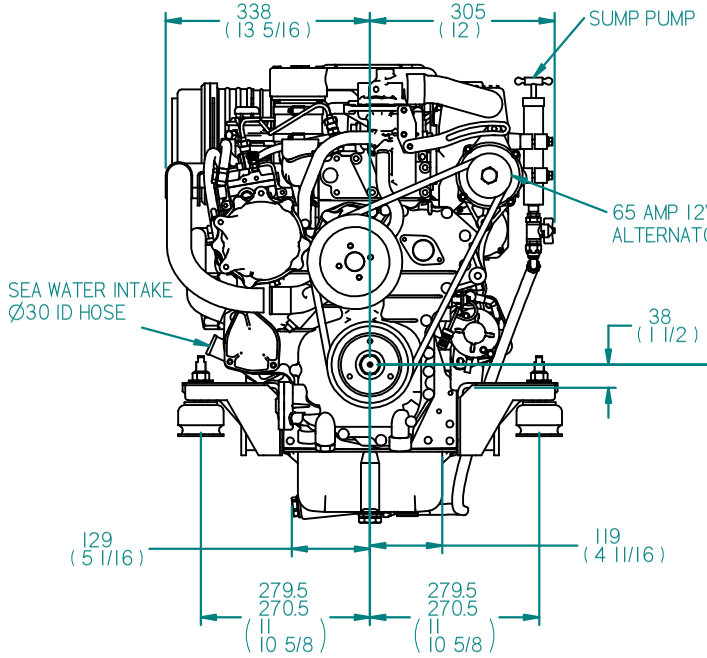

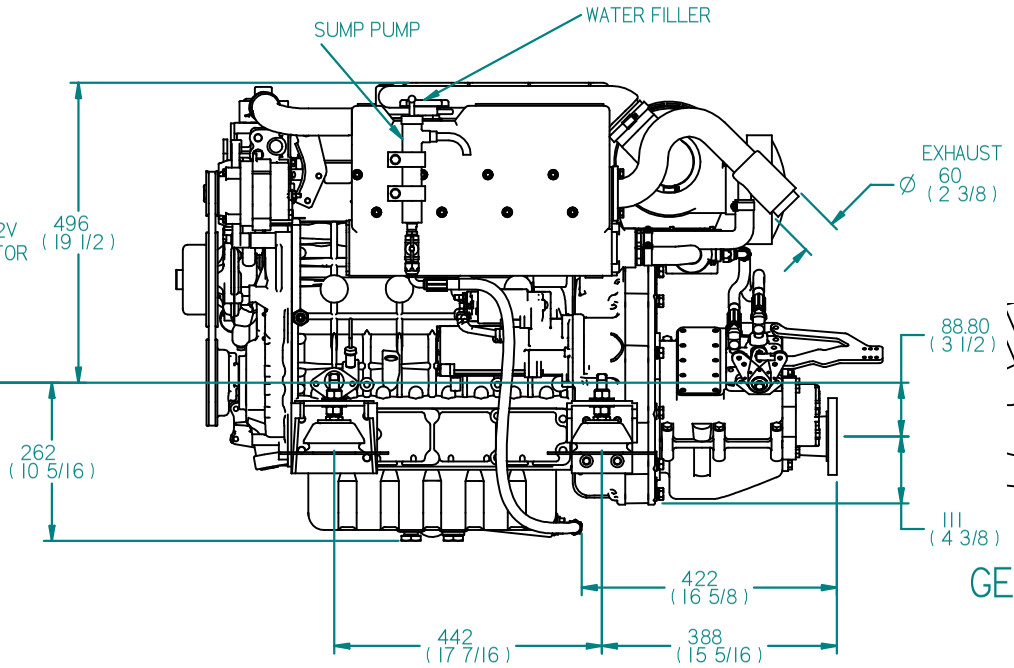

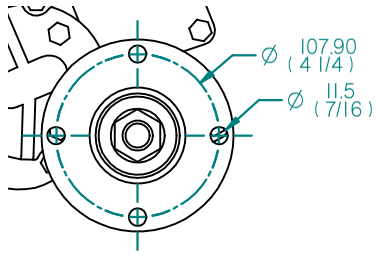

GEARBOX OUTPUT

REV	DESCRIPTION	DATE	APP'D	DRAWN
01				

NOTES

TITLE:

BETA 75 HEAT EXCHANGE PRM260

DIMENSIONS IN MM (INCH)
DO NOT SCALE

PART FILE NAME: 100-06202 BETA75 (3300) HE PRM260.asm

BETA MARINE
TEL: (01452) 723492 FAX: (01452) 729916
BETA MARINE LTD,
DAVY WAY,
WATERWELLS,
QUEDGELEY,
GLOUCESTER. GL2 2AD, UK

DRAWN BY:	TW	SIZE	A4	DWG NO:	100-06202	REV	03
CHECKED BY:	LT	SCALE	NTS	PAGE	1 of 1	DATE	05/10/2009